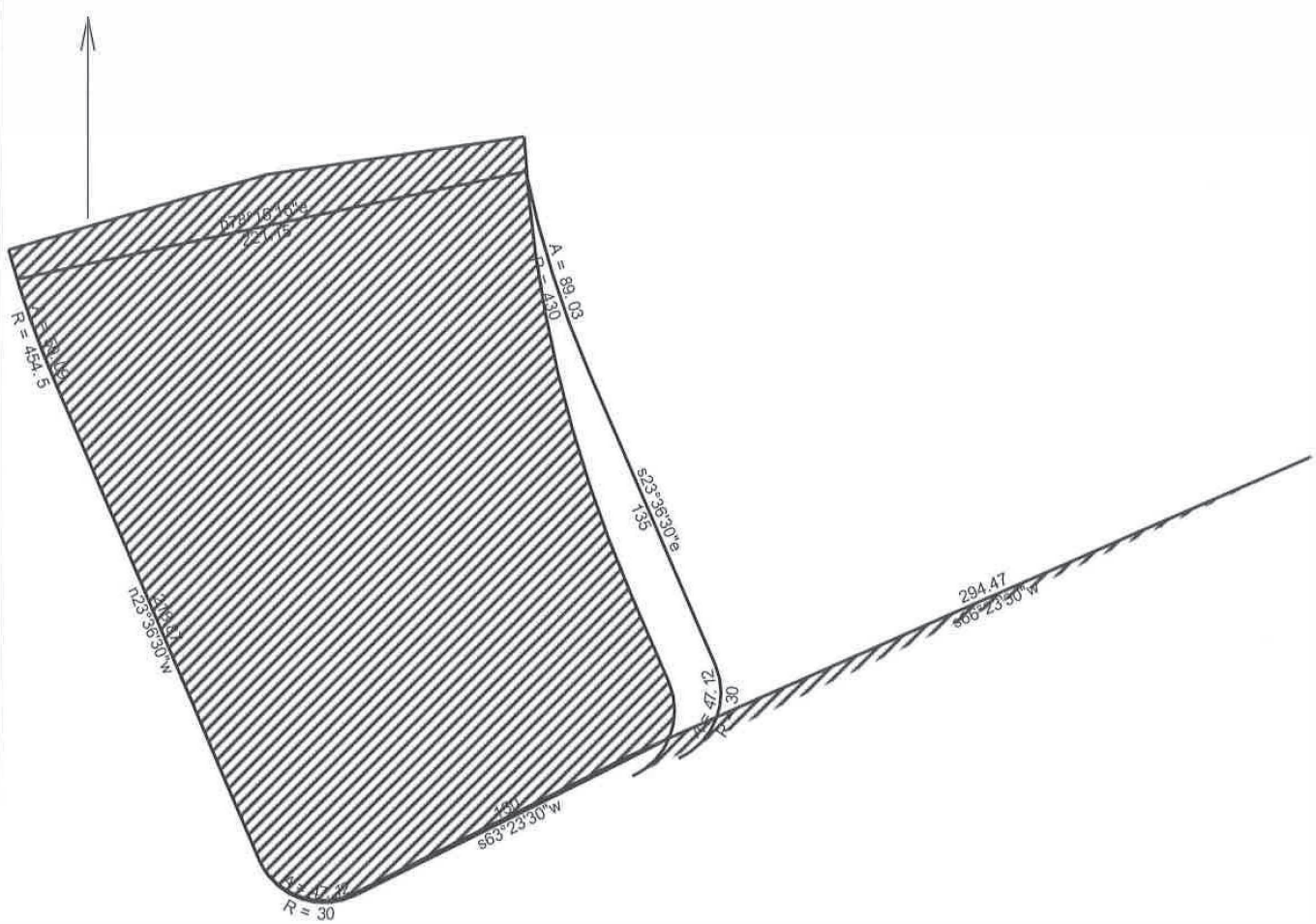

8/19/2020

Scale: 1 inch= 71 feet | File: Combined Descriptions.ndp

Tract 1: 2.0624 Acres (89837 Sq. Feet), Closure: n64.3334e 295.94 ft. (1/4), Perimeter=1253 ft.
Tract 2: 2.1637 Acres (94251 Sq. Feet), Closure: n64.5246e 316.94 ft. (1/4), Perimeter=1285 ft.

01 s66.2330w 294.47
02 s63.2330w 150
03 Rt, r=30.00, delta=090.0000, arc=47.12
04 n23.3630w 218.87
05 Rt, r=454.50, delta=006.1851, arc=50.09
06 n78.1516e 221.15
07 Lt, r=430.00, delta=011.5146, arc=89.03, tan=s11.4444e
08 s23.3630e 135
09 Rt, r=30.00, delta=090.0000, arc=47.12
10 @1
11 s66.2330w 315.47
12 s63.2330w 129
13 Rt, r=30.00, delta=090.0000, arc=47.12
14 n23.3630w 218.87
15 Rt, r=454.50, delta=007.4905, arc=62.02
16 n74.1235e 115.16
17 n81.4230e 110
18 Lt, r=560.00, delta=020.2904, arc=200.21, tan=s03.0726e
19 s23.3630e 40
20 Rt, r=30.00, delta=090.0000, arc=47.12